DPS | Montgomery County Department of Permitting Services
YOUR PROJECT PARTNER

2425 Reedie Drive, 7th floor
Wheaton, MD 20902
240-777-0311
montgomerycountymd.gov/dps

MONTGOMERY COUNTY
GUIDELINES FOR RESIDENTIAL RETAINING WALLS
4 FEET IN RETAINED HEIGHT OR LESS

TIMBER

REINFORCED CONCRETE

REINFORCED MASONRY

CONTENTS

1. General Requirements and Limitations…… 2
2. Definitions……..……..… 2
3. Regulations…… …… 3
4. How to apply……...……..... 3
5. What to Submit…….……..... 3
6. Permit Process……..……4
7. Public Utilities……..……4
8. Inspections……4
9. Timber Retaining Walls……...5
10. Reinforced Masonry Retaining Walls…….... 7
11. Reinforced Concrete Retaining Walls……..12

1. GENERAL REQUIREMENTS

A permit is required to construct a retaining wall if the retained height is over 3 feet (36”) or it will be supporting any surcharge load, crosses a lot line, located in problem soils, or part of a tiered retaining wall system. The retaining wall shall be designed in accordance with accepted engineering practices to ensure stability against overturning, sliding, excessive foundation pressure, and water uplift.

A permit application for a retaining wall installed on the private property line must include a letter of approval from the adjacent property owner. A separate permit will be needed for any segment of the retaining wall on crossing a lot line. Occasionally, lot conditions require approvals from other agencies such as easement holders, or homeowner associations. Any Retaining Wall installed within the County Right of Way will not be permitted.

This guideline can be used in lieu of construction plans and provides the procedures for permitting and inspections for residential lumber, reinforced masonry, reinforced concrete, non-tiered, non-stacked retaining walls with level backfill that meet the following conditions only:

1. Retained height is less than 4’-0”, with no surcharge.
2. No surcharge load from adjacent structures or driveways.
3. No problem soils.

If any of these conditions are not met, retaining wall construction plans prepared by a Maryland licensed design professional will be required.

https://www.montgomerycountymd.gov/DPS/Process/rci/residential-retain-wall.html

Guards shall be provided for retaining walls with a difference in grade level on either side of the wall exceeding 30 inches and located within 2 feet of a defined walkway, path, parking lot, or driveway on the high side as required by section R312.1.1 of the 2021 IRC as amended by Montgomery County Executive Regulation 13-24.

2. DEFINITIONS

1. **Problem Soils:** Soil types characterized by the presence of a high-water table, expansive soils, compressible soils, shifting soils, soils with low bearing capacities, frost heave potential or other questionable soil characteristics.
2. **Retained Height:** The difference in grade between either side of the retaining wall at the same location.
3. **Retaining Wall:** A wall not laterally supported at the top, that resists lateral soil load used as a landscaping technique intended to change the contour or grading of a site.
4. **Surcharge.** The vertical load imposed on retained soil that may impose a lateral force in addition to lateral earth pressure of retained soil. For example: Sloping retained soil; structure footings supported by the retained soil; adjacent vehicle loads supported by retained soil.
5. **Tiered Retaining Wall System**. A series of two or more stacked walls, each higher wall set back from the underlying wall.

3. REGULATIONS

The Montgomery County Code requires that one and two-family dwellings and their accessory structures – which include retaining walls - comply with the *Montgomery County Building Code*, *Zoning*, and *Well & Septic* requirements.

The Montgomery County Building Code

Montgomery County Building Code incorporates by reference the International Residential Code (IRC) for One- and Two-Family Dwellings, 2021 edition, and the National Electric Code (NEC), 2017 edition, with local amendments.

Zoning Requirements

Applicants should check with the Zoning Section, **Call 311 in Montgomery County or 240-777-0311 outside Montgomery County,** about the yard and other zoning-related requirements. Retaining walls 4 feet or less in height (and not on a property abutting a historic park) are not subject to setback restrictions.

Applicants should check with the Well & Septic Section, **Call 311 in Montgomery County or 240-777-0311 outside Montgomery County,** about the requirements pertaining to construction on lots served by a septic system or private well. Appropriate clearances from the septic system or well must be maintained.

Covenants and Deed Restrictions

Many of the subdivisions and developments in Montgomery County have private deed restrictions and covenants regulating the construction of retaining walls beyond the limitations contained in County Ordinances. Montgomery County does not enforce covenants and deed restrictions. Should you have questions about your development's restrictions, you may obtain information from your homeowner's association, or civic association.

4. HOW TO APPLY

Application for a retaining wall permit can be submitted online.

https://www.montgomerycountymd.gov/DPS/Process/rci/residential-retain-wall.html

Homeowners may secure the building permit in their own name; however, if a contractor is to perform the work, DPS strongly suggests that the contractor be listed on the permit as the party responsible for the work. In this way, the DPS will be in a better position to assist the applicant in gaining compliance with codes if the work is defective. A contractor must be properly licensed in order to obtain a building permit.

5. WHAT TO SUBMIT

To apply for a retaining wall permit 4ft or less, the applicant must electronically submit a site plan to the Department of Permitting Services for review. The retaining wall location must be shown on the on the house location plat or "house location survey", including distances from the retaining wall to

the lot lines and the height from grade to the top of the retaining wall. Address and street, alley location must be shown on the plan. Please note that:

- Plats or house location surveys must be to scale and prepared by a Maryland-licensed surveyor.
- If County easements are present on a lot, no construction shall encroach into space of the easement,
- If you do not have a copy of the house location plat, a copy may be obtained from the Zoning Section if there is one on file.
- For more zoning information please visit: the Zoning Webpage.

6. PERMIT PROCESS

Applications must be submitted online via DPS online services. Once the application is received and the filing fee is paid, the application will be assigned a permit number to identify the project. The documents are then screened, and a Project Dox review cycle will be initiated to obtain approval from the applicable required sections:

- Zoning Section: will sign off after the plat has been reviewed and approved for zoning-related issues.
- Well & Septic section: will sign off after the plat has been reviewed and approved for clearances to existing wells and/or septic tanks if they exist on the property.
- Building Plan Review Section: will sign off after all other reviews are approved.
- Pay final fee if any.

7. PUBLIC UTILITIES

Call "Miss Utility" at 1-800-257-7777 before excavating to ensure that the construction does not interfere with underground utility lines. "Miss Utility" is a free service to anyone who is planning to excavate. Companies such as Pepco, BG&E, Washington Gas Light Company, Verizon, and Montgomery County Cable support "Miss Utility" to prevent damage to their buried lines. Call at least 48 hours prior to excavating. The various companies will mark the path of underground utilities on the property. It's the law!

8. INSPECTIONS

Inspections help to establish that the retaining wall has been built in accordance with the structural and safety provisions of the Montgomery County Building Code, standard construction practices and the Montgomery County Residential 4ft. or less guidelines.

Failure to receive any and/or all inspections can result in the issuance of violations, which may lead to legal proceedings. In addition, many insurance companies require all residential construction to be permitted and inspected by the local jurisdiction in order to provide coverage for the new construction.

A copy of this guidelines and the site plan must be on the job site and available to the inspector.

Required Inspections

- **Footings**: Excavation for retaining wall footing is inspected prior to concrete placement (sometimes). Grade stakes shall be placed and reinforcing steel installed. Sediment control measures installed per the approved sediment control plans, if any.
- **Rebar, deadman, geogrid placement:** Inspected prior to retaining wall backfilling.
- **Final:** Construction complete

Under the Montgomery County Building Code, it is the responsibility of the permit holder or the permit holder's representative to notify the county when the stages of construction that require an inspection are reached.

An inspection can be requested by calling 311 in Montgomery County or 240-777-0311 outside Montgomery County. Please have your permit number available to give to the operator. You may also schedule your inspection online. Requests made prior to 12:00 A.M. will be scheduled for the next workday.

9. TIMBER RETAINING WALLS

1. All lumber shall be 6x6, pressure treated in accordance with the American Wood-Preservers Association standards for ground contact, southern pine, grade #2 or better.
2. All spikes shall be 60d or equivalent, hot-dipped galvanized or stainless steel, and driven into pre-drilled holes. Spikes shall be of sufficient length to penetrate the base member a minimum of 2 in.
3. Member joints shall be staggered a minimum of 3’-6” from joints of the courses above and below.
4. Each 6x6 member shall be secured at each end with 2-60d spikes driven vertically into the member below. Corners shall be secured with 2-60d spikes, driven horizontally as shown in Figure 4.

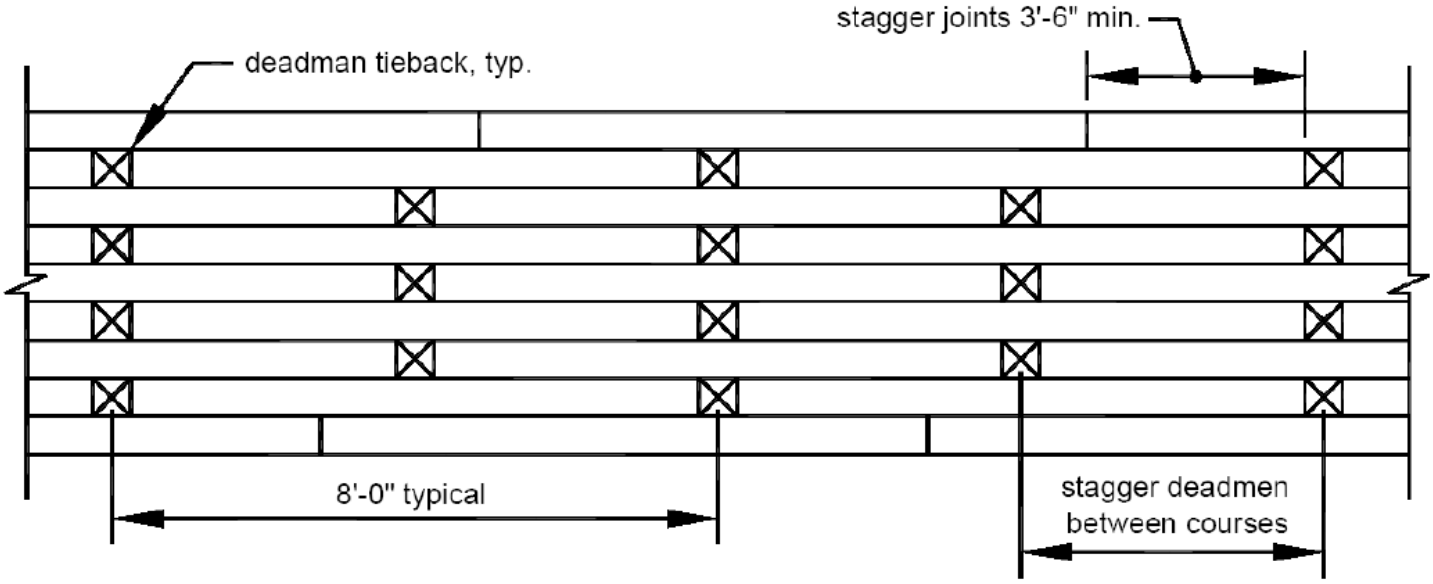

FIGURE 1: TYPICAL ELEVATION

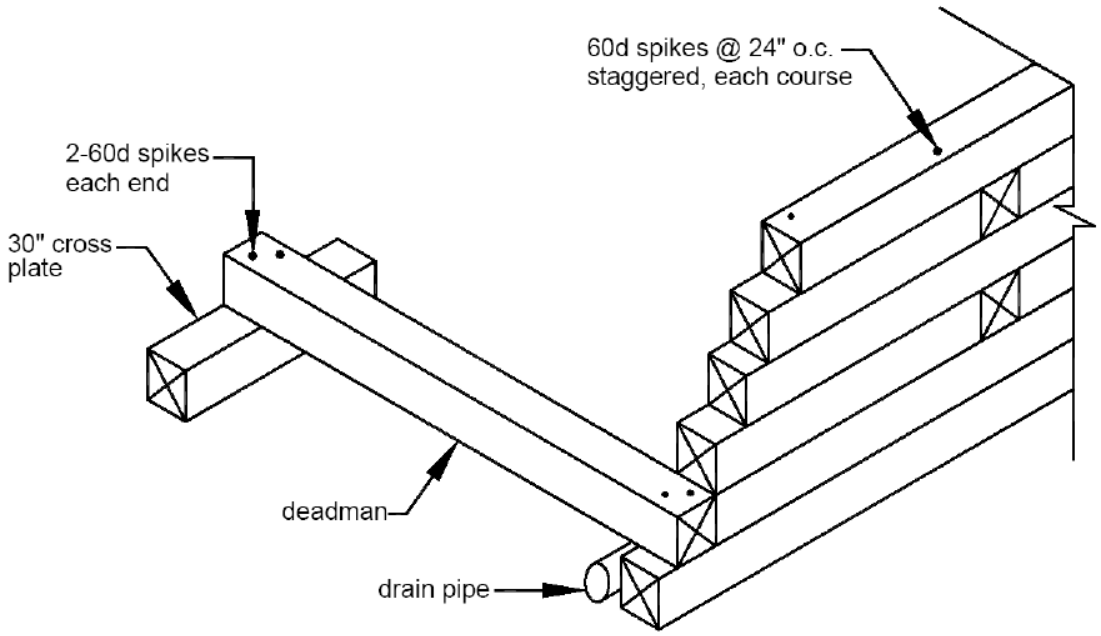

FIGURE 2: TYPICAL DEADMAN DETAIL

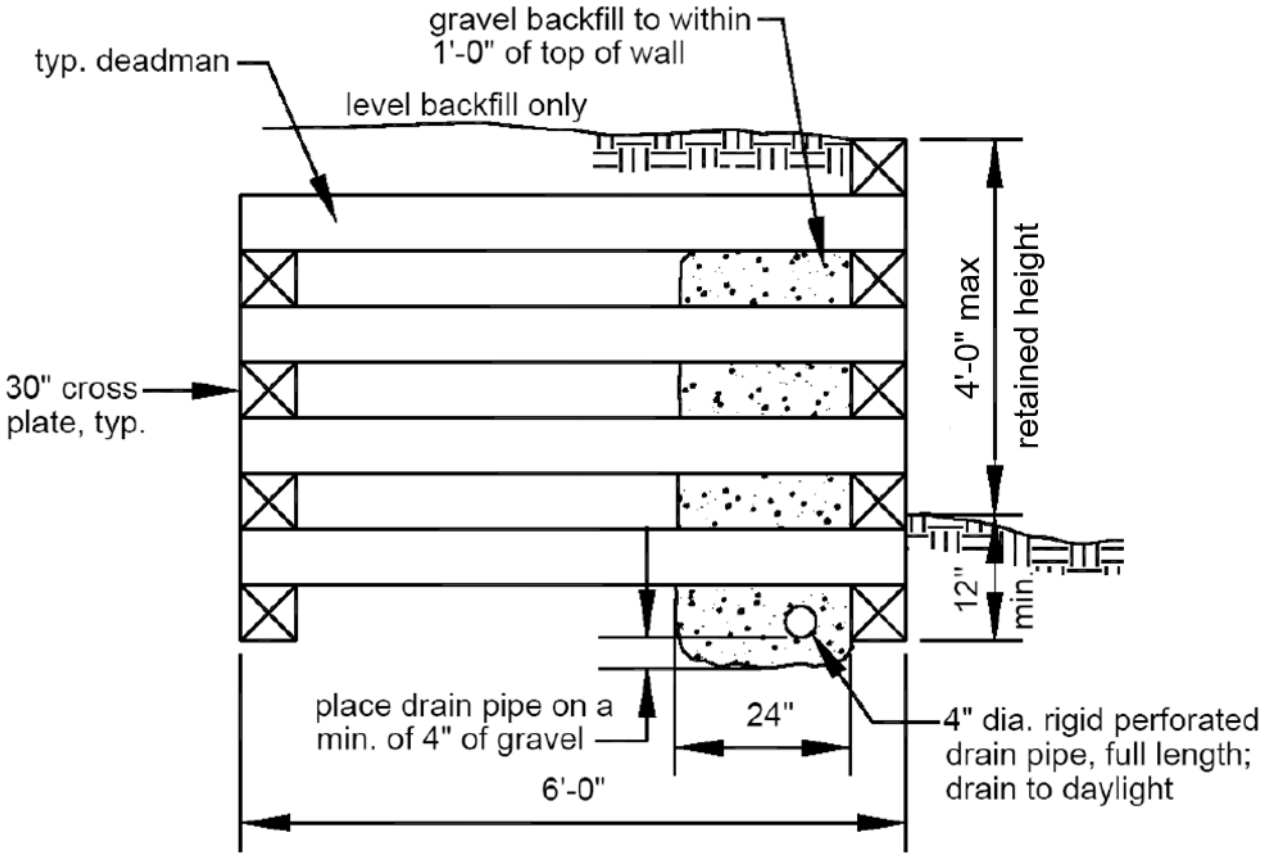

FIGURE 3: TYPICAL SECTION

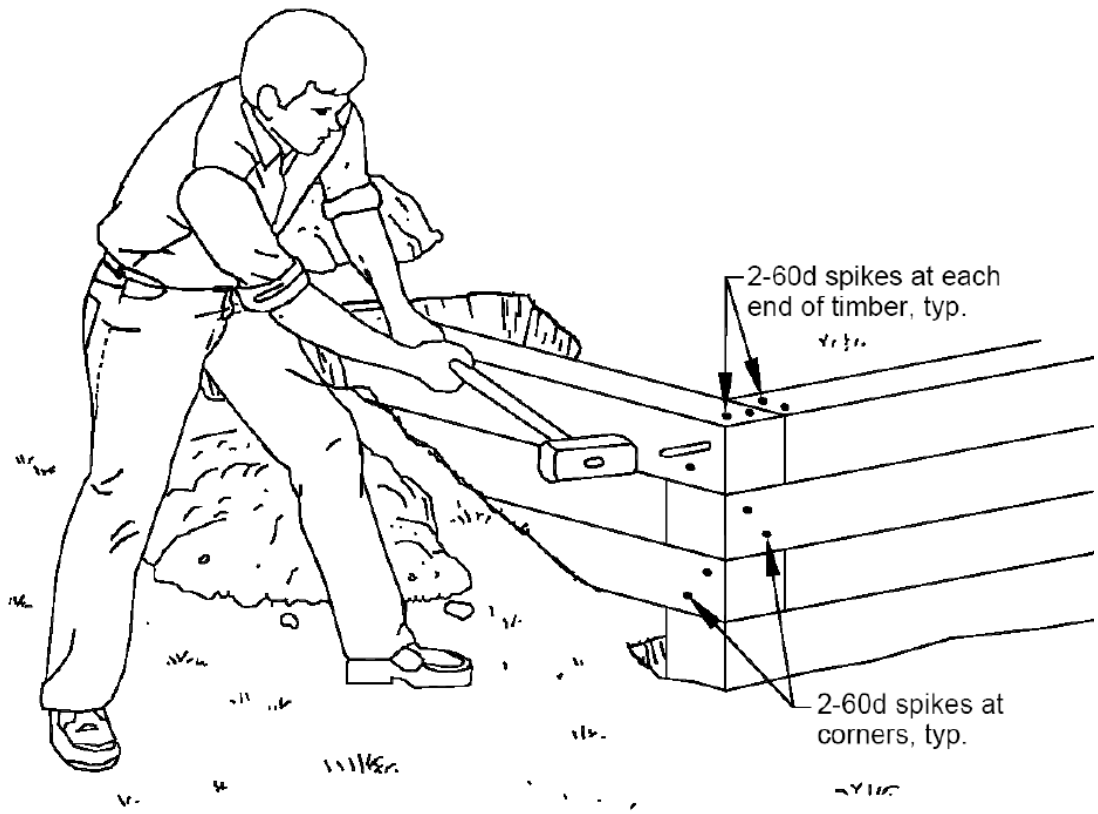

FIGURE 4: TYPICAL CORNER DETAIL

10. REINFORCED MASONRY RETAINING WALLS

1. The minimum concrete compressive strength at 28 days shall be 3000 psi.
2. Materials used to produce concrete shall comply with the requirements of ACI 318-19.
3. Reinforcing steel shall comply with the requirements of A615/A615M—2015aE1and shall have a minimum yield strength of 60,000 psi.
4. Concrete masonry blocks shall comply with the requirements of C90—2016A.
5. All joint reinforcements, ties, and other accessories shall be corrosion resistant.
6. All head and bed joints shall be 3/8” thick. Bed joints of the starting course over the concrete foundation may be between ¼” and ¾”.
7. Mortar for masonry construction shall conform to the requirements of ASTM C270-14A.
8. Backfilling against reinforced concrete masonry retaining walls shall not be permitted until at least 7 days after placing concrete or grout in respective cores.
9. Where heavy equipment is used to backfill walls designed to resist earth pressure only, the equipment shall not approach closer to the top of the wall than a distance equal to the height of the wall. Care shall also be taken to avoid exerting large impact forces on the walls as caused by a large mass of moving earth.
10. Reference: National Concrete Masonry Association

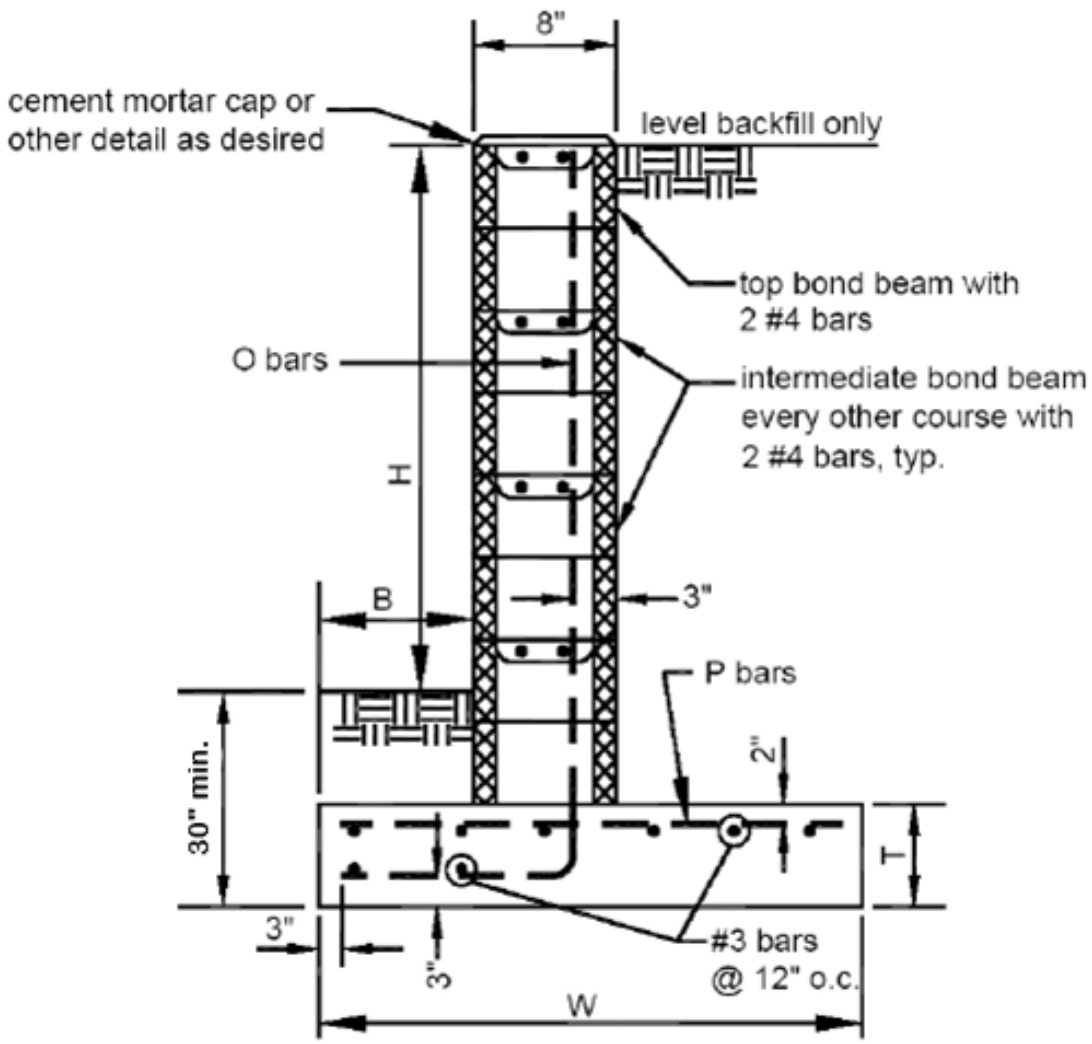

FIGURE 5: TYPICAL MASONRY WALL SECTION

Dimensions				Reinforcing Bars	
H	**B**	**W**	**T**	**O**	**P**
2'-0"	12"	2'-8"	9"	#3@32"o.c.	#3@27"o.c.
2'-9"	12"	3'-0"	9"	#4@32"o.c.	#3@27"o.c.
3'-6"	12"	3'-3"	10"	#5@32"o.c.	#3@27"o.c.
4'-0"	14"	3'-8"	10"	#4@16"o.c.	#4@30"o.c.

TABLE 1: TYPICAL MASONRY WALL SPECIFICATIONS

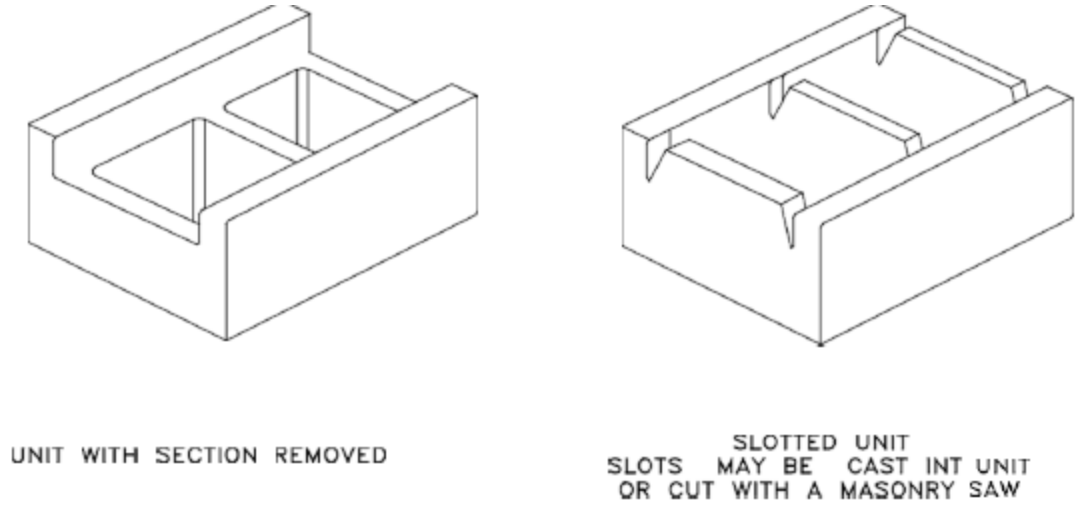

FIGURE 6: TYPICAL BOND BEAM BLOCK TYPES

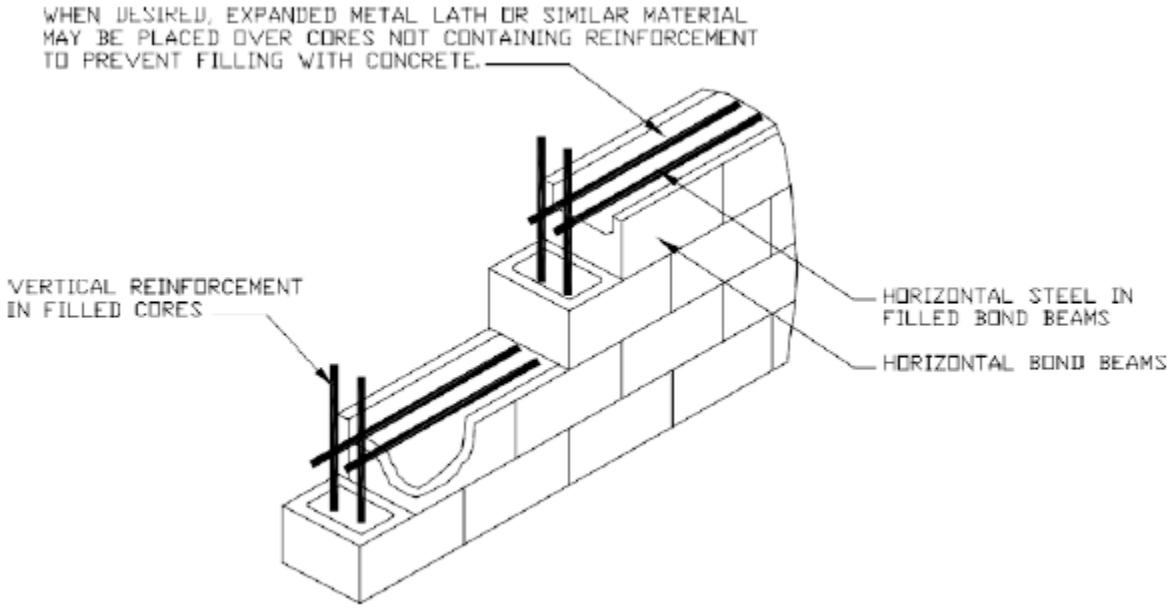

FIGURE 7: TYPICAL REINFORCEMENT DETAIL

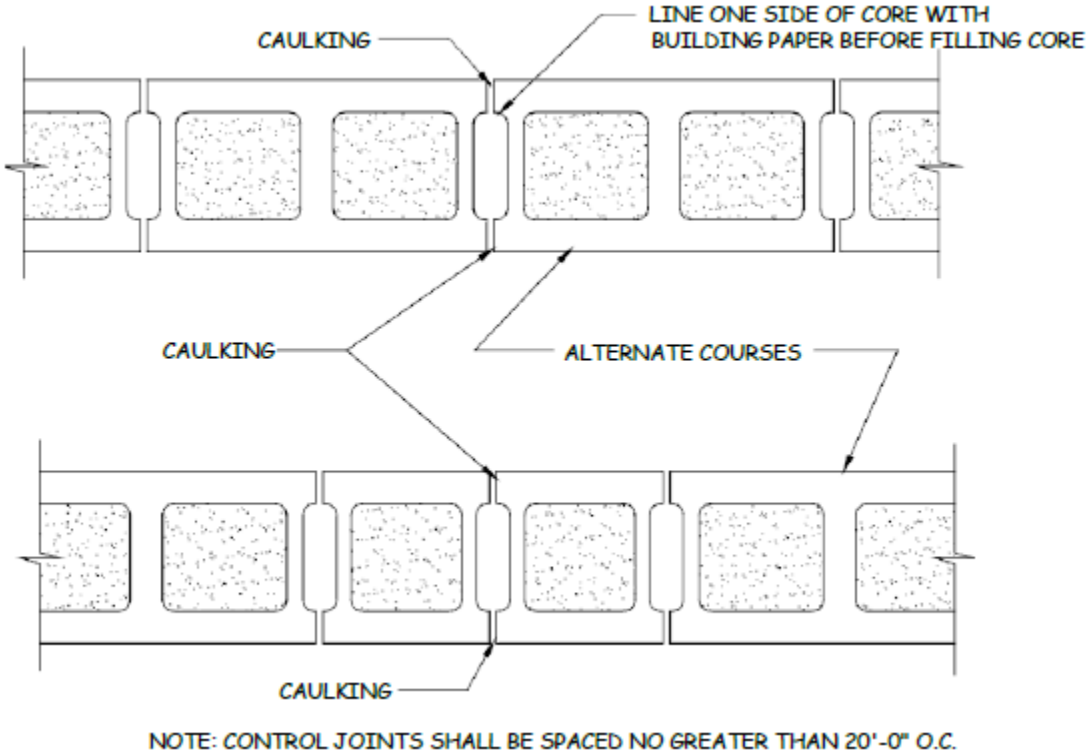

FIGURE 8: TYPICAL CONTROL JOINT DETAIL

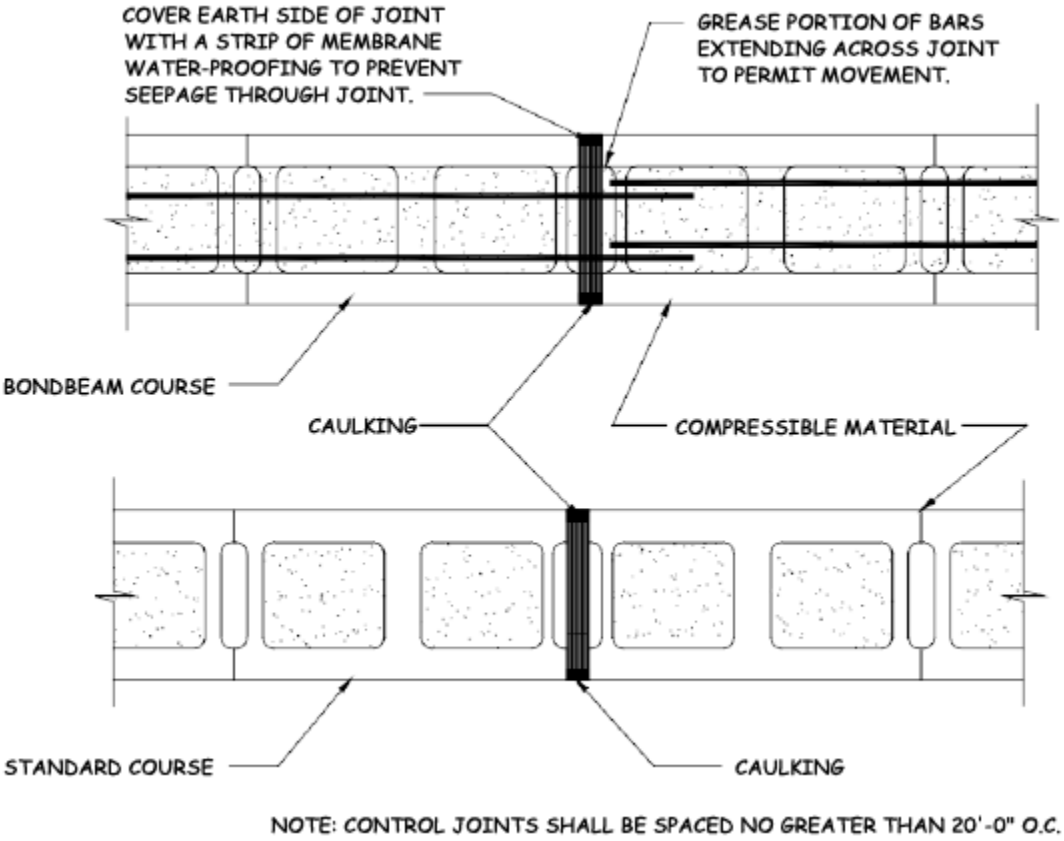

FIGURE 9: TYPICAL EXPANSION JOINT DETAIL

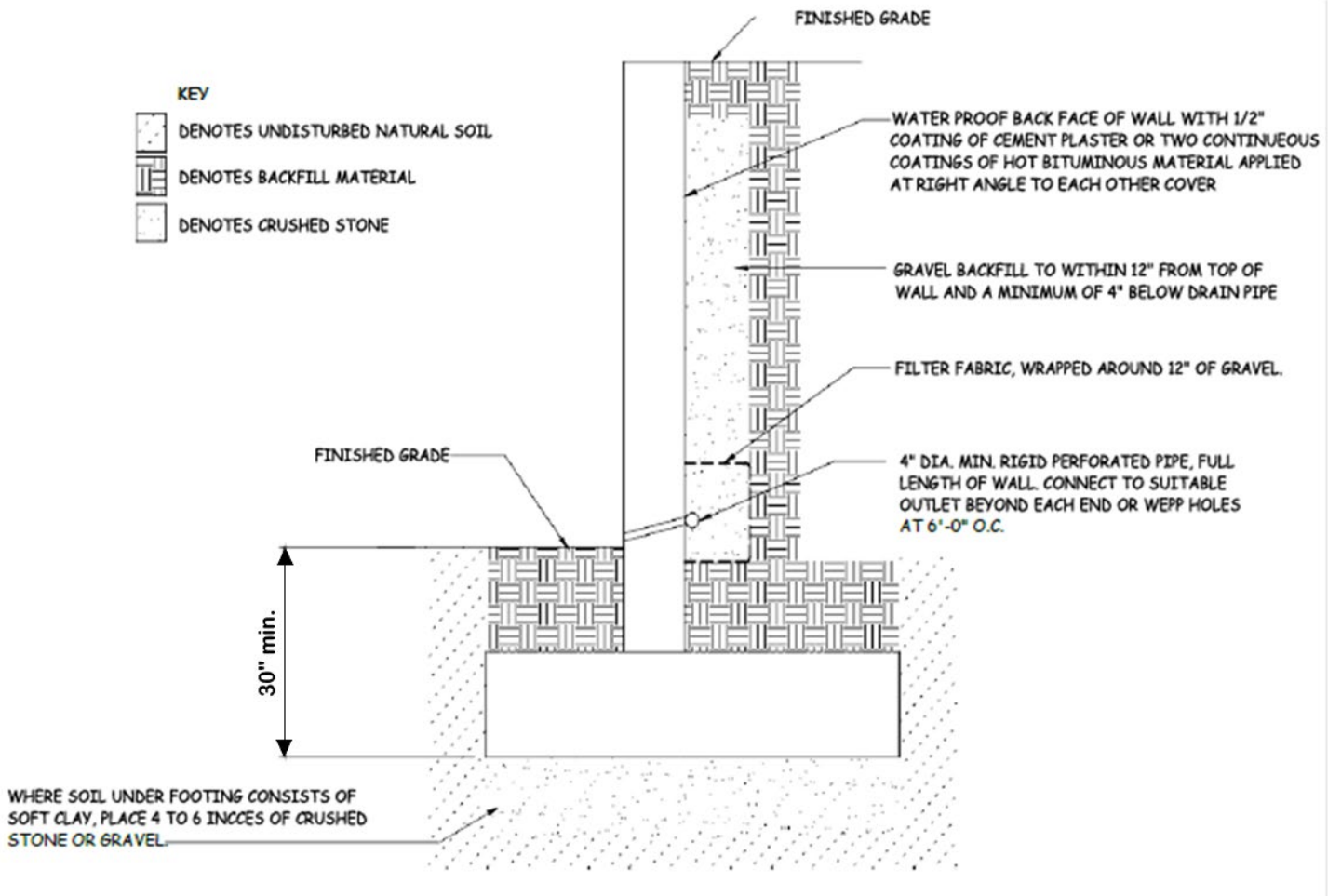

FIGURE 10: TYPICAL BACKFILL AND DRAINAGE DETAIL

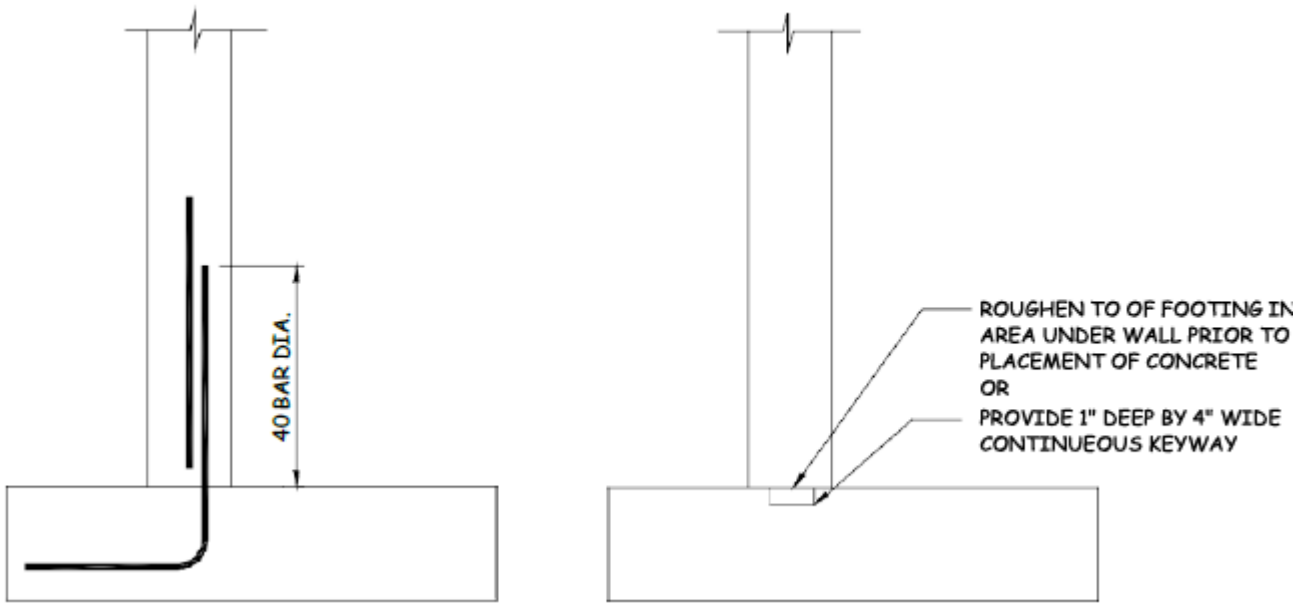

FIGURE 11: TYPICAL DOWEL AND KEYWAY DETAIL

11. REINFORCED CONCRETE RETAINING WALLS

1. The minimum compressive strength at 28 days shall be 3500 psi.
2. Materials used to produce concrete shall comply with the requirements of ACI 318.
3. Reinforcing steel shall comply with the requirements of ASTM A615 and shall have a minimum yield strength of 60,000 psi.
4. Backfilling against reinforced concrete retaining walls shall not be permitted until the concrete has reached its 28 days strength.
5. Where heavy equipment is used to backfill walls designed to resist earth pressure only, the equipment shall not approach closer to the top of the wall than a distance equal to the height of the wall. Care shall also be taken to avoid exerting large impact forces on the walls as caused by a large mass of moving earth.
6. Reference: Concrete Reinforcing Steel Institute

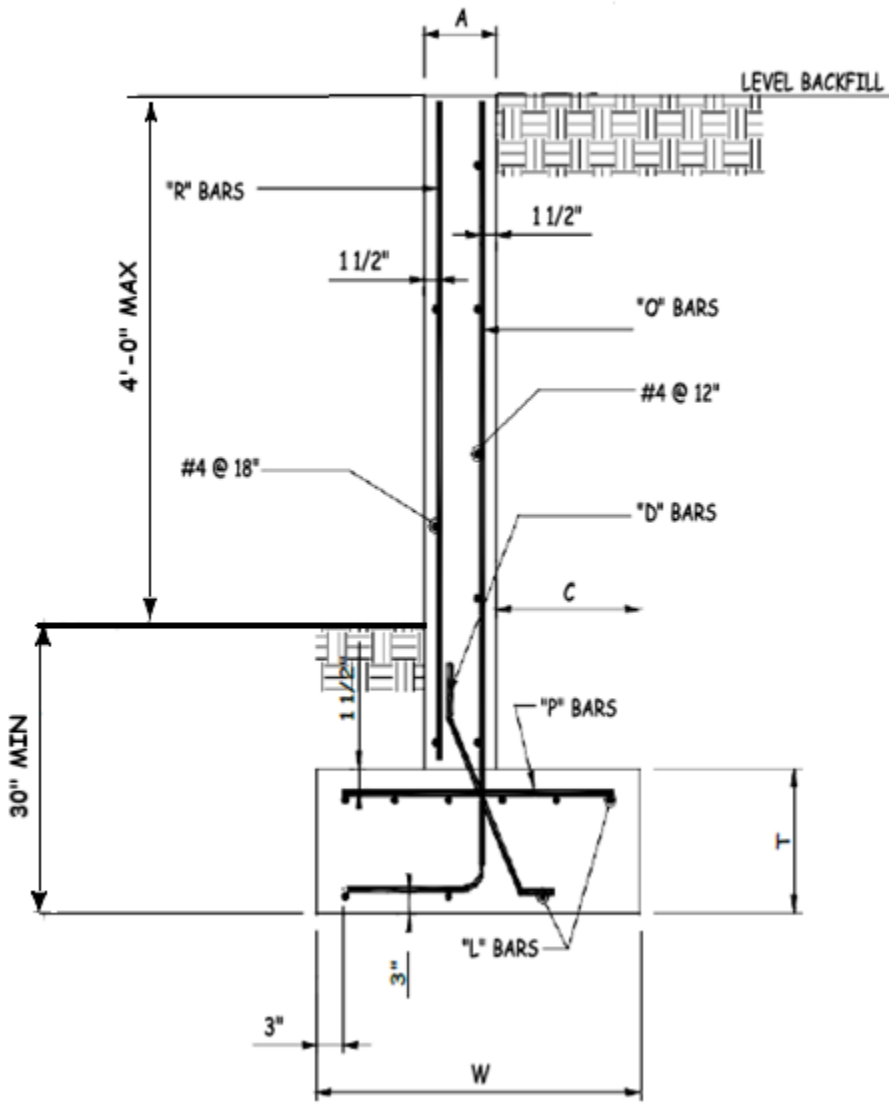

FIGURE 12: TYPICAL REINFORCED CONCRETE WALL SECTION

Dimensions					Reinforcing Bars				
H	A	C	W	T	R	O	D	P	L
Level Backfill									
2'-0"	8"	10"	2'-0"	12"	N.A.	#4@18"O.C.	N.A.	#4@18"O.C.	2#4
3'-0"	8"	1'-1"	2'-6"	12"	N.A.	#4@18"O.C.	N.A.	#4@18"O.C.	3#4
4'-0"	8"	1'-4"	3'-0"	12"	#4@18"O.C.	#4@18"O.C.	N.A.	#4@18"O.C.	4#4

TABLE 2: TYPICAL REINFORCED CONCRETE WALL SECTION

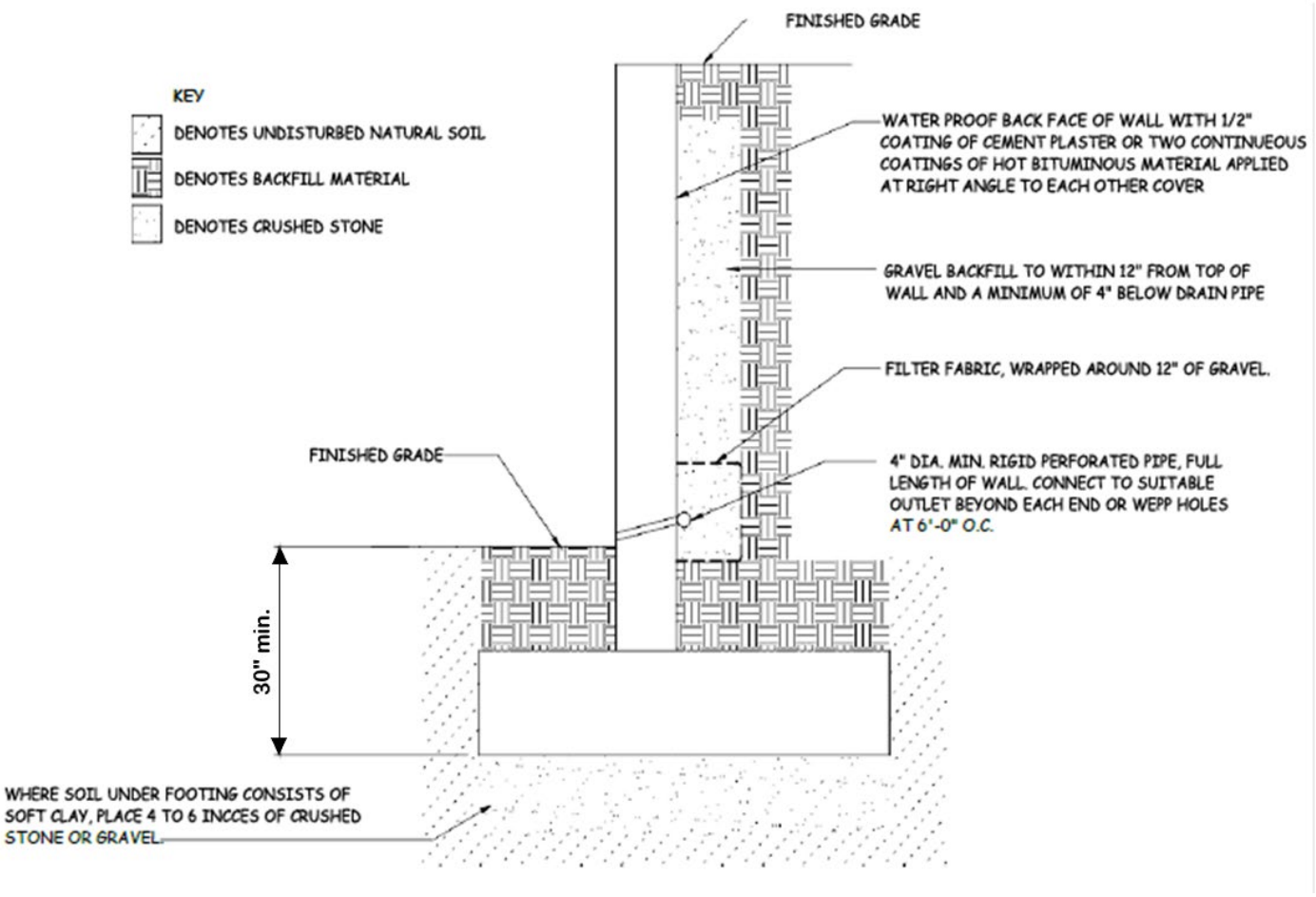

FIGURE 13: TYPICAL BACKFILL AND DRAINAGE DETAIL

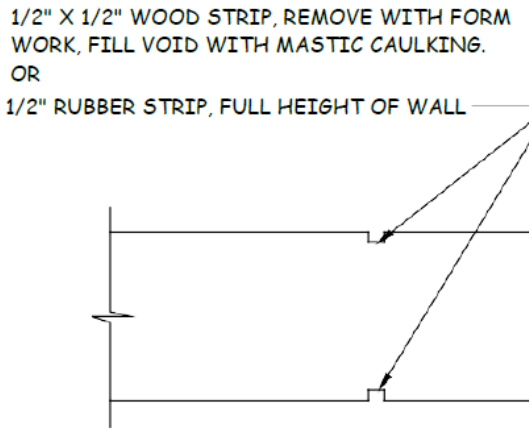

NOTE: CONTROL JOINTS SHALL BE SPACED NO GREATER THAN 20'-0" O.C.

FIGURE 14: TYPICAL CONTROL JOINT DETAIL

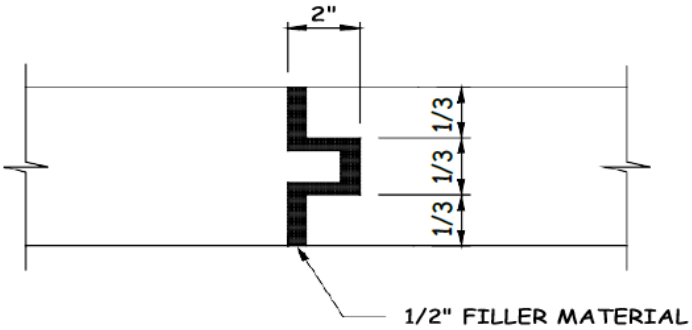

NOTE: EXPANSION JOINTS TO BE SPACED AT EVERY FOURTH CONTROL JOINT LOCATION.

FIGURE 15: TYPICAL EXPANSION JOINT DETAIL

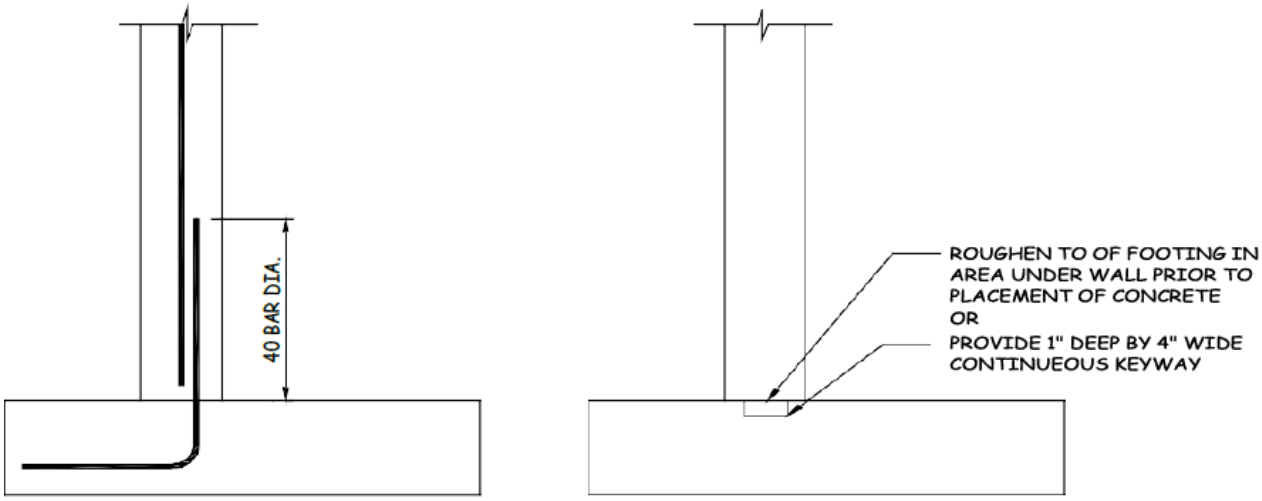

FIGURE 16: TYPICAL EXPANSION JOINT DETAIL